Mature elm tree in the Yorkshire Dales

Identification of elm leaves: one side lower than the other at the leaf stem

PLANS AND EQUIPMENT

EQUIPMENT USED
13mm bowl gouge
19mm skew chisel
Abrasive from 120 to 400 grit
Paste wax and soft cloth

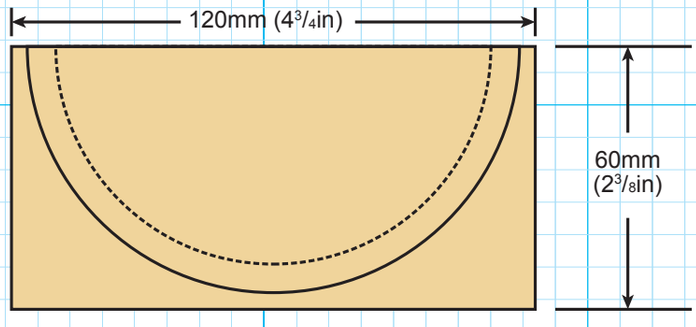

Front view

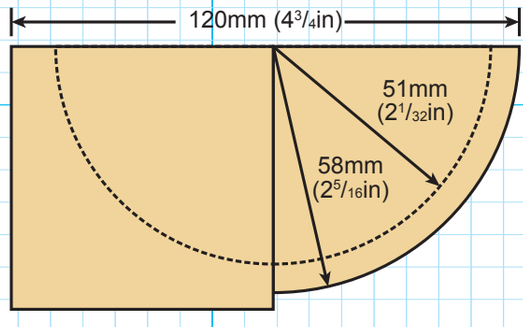

Side view

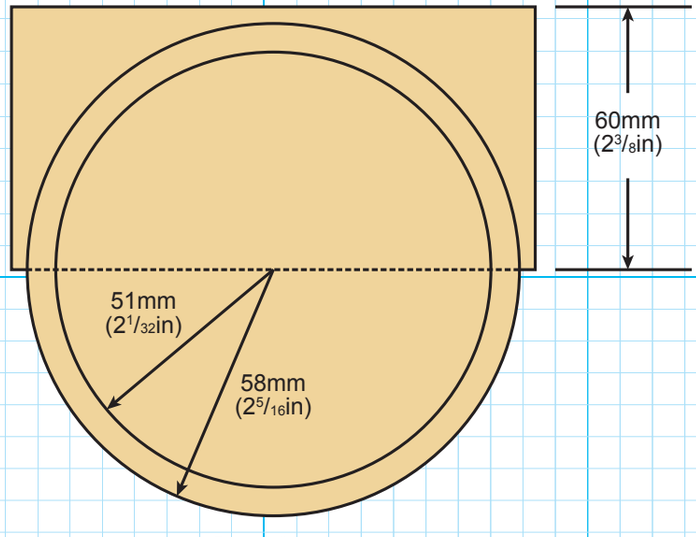

Plan View

The emerging bowl seems to be coming out of a solid block of wood. To the uninitiated it can present something of a conundrum as to how it could have been turned. It's wise to keep it fairly small while you practise the technique.

WT_291_51_55_ELM_BC_vsMBbcbdSD.indd 52 24/02/2016 16:21